DNH
Loudspeakers

DNH SOUND

< Makes the world sound >

“The original

“MORE THAN 60 SOUND YEARS”

DNH Design”

DNH designs and manufactures one of the world's largest range of loudspeakers.

Since the company was established in 1946, DNH is renowned as a supplier of high quality products.

All DNH products are engineered and designed in Norway, and almost 90% are exported around the world.

In addition to the strong niche products such as flameproof, weatherproof, vandal-proof and shockproof speakers, DNH is known for its ability to tailor products according to the customers demands.

Due to the fact that DNH manufactures almost all the components of the speaker, "non-standard" requirements such as special colour, special transformers and different cable entries can be supplied.

index

Plastic Horn Speakers	4-5
Metal Horn Speakers	6-7
Music Horn Speakers	8-9
Alarm Horn Speakers	8-9
EEx Speakers	10-11
Music Masters	12-13
Cabinet Speakers	14-15
Projectors	16-17
Metal Ceiling Speakers	18-19
Plastic Ceiling Speakers	20-21
Specialities	22-23
Voice Alarm	22-23
Clean Room Speakers	22-23

Plastic Horn Speakers

DNH proudly present this exciting range of high quality plastic horn loudspeakers. The HP series can be installed in all manner of harsh environments, both internal and external for public address and intercom uses.

Their frequency range and high sensitivity, combined with high corrosion resistance and pleasing design make the products stand out in terms of quality and performance.

Excellent for PA and alarm systems on ferries, railways, airports and industrial installations.

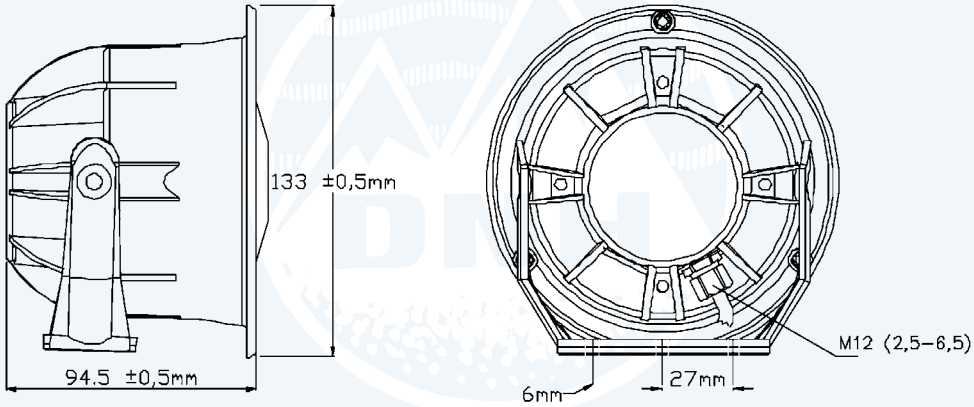

Model	HP-6	HP-6C	HPS-6	HP-8	VEH-6	BIVEH-6
Material/Colour	PA/RAL 7035	PA/RAL 7035	PA/RAL 7035	PA/RAL 7035	ABS/RAL 7035	ABS/RAL 7035
Rated/max power, Watt	6W/ 15W	6W/ 15W	6W/ 15W	8W/ 15W	6W/ 6W	6W/ 10W
SPL/1W/1m(dB)	101 dB	101 dB	101 dB	101 dB	103 dB	103 dB
Effective freq.range, Hz	500-7500 Hz	500-7500 Hz	500-7500 Hz	600-7500 Hz	650-5000 Hz	650-5000 Hz
Max/Min.amb.temp. (IP)	90˚C/-40˚C (67)	90˚C/-40˚C (67)	90˚C/-40˚C (67)	150˚C/-50˚C (67)	90˚C/-40˚C	90˚C/-40˚C
Dimensions, mm	Ø97x85	Ø97x132	121x121x118	Ø133x95,5	110x148	110x139

please see: **www.dnh.no**

“The Sound Ambassador”

Plastic Horn, references :

- Channel Tunnel Link, UK & France
- Nat West Tower Refurbishment Project in London
- Opel/Vauxhall plants in UK, Spain, Germany and Austria
- Bahia Plant, Brazil
- Munich Airport in Germany
- Carnival Cruise Line
- Royal Carribien Cruise Line
- Holland American Line

DSP-15	DSP-15sL	HP-10	HP-15	HP-20	HP30
ASA/RAL 7035	ASA/RAL 7035	ASA/RAL 7035	ASA/RAL 7035	PA/RAL 7035	PA/RAL 7035
15W	25W	10W/15W	15W/ 20W	20W/ 25W	30W/40W
108 dB	112 dB	106 dB	108 dB	110 dB	110 dB
320-8000 Hz	290-8000 Hz	410-8000 Hz	330-8000 Hz	310-8000 Hz	310-8000 Hz
50˚C/-55˚C (67)	50˚C/-55˚C (67)	90˚C/-50˚C (56)	90˚C/-50˚C (56)	150˚C/-50˚C (67)	150˚C/-50˚C (67)
186x247x144	349x275x200	Ø139x198	Ø200x247	Ø237x286	Ø237x286

DNH reserves the right to alter specifications wihout notice

Metal Horn Speakers

The DNH aluminium horn series represents an extremely robust range of heavy duty horn speakers.

These speakers are renowned for both high reliability and superb efficiency, that makes them suitable for all industrial environments and public areas such as railway-stations, dockyards and manufacturing works.

HS-15S is designed to withstand external sound shocks.

The vandal-proof SAFE-15 has been designed with a separate weatherproof internal compartment.

HSS-15 in stainless steel, is made to withstand extreme environments.

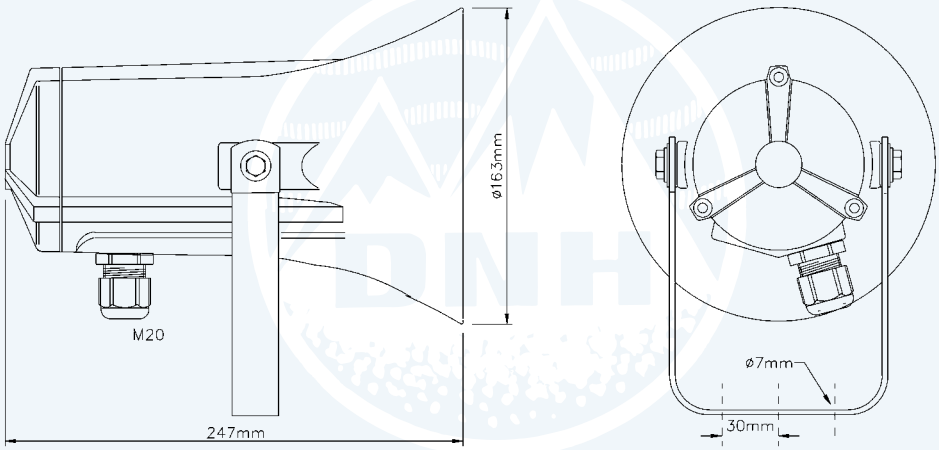

Model	HS-15	HS-15 S
Material/Colour	Alu/RAL 7031	Alu/RAL 7031
Rated/max power, Watt	15W/20W	15W/20W
SPL/1W/1m(dB)	107 dB	107 dB
Effective freq.range, Hz	350-7500 Hz	350-7500 Hz
Max/Min.amb.temp. (IP)	150˚C/-50˚C (67)	150˚C/-50˚C (55)
Dimensions, mm	Ø163x247	Ø163x247

please see: **www.dnh.no**

“The Sound Ambassador”

The DNH Aluminium horn speakers have been supplied to many different projects throughout the world. Among them :

- Channel Tunnel between England and France
- Changi Prison, Singapore
- London Underground, England
- Rendsburg-Tunnel, Germany
- Tramway in Augsburg, Germany
- Electronuclear Plant, Brazil

HSS-15	SAFE-15
Stainless Steel	Alu/RAL 9010 or 3000
15W/20W	15W/30W
108 dB	95 dB
360-8000 Hz	500-3000 Hz
150˚C/-55˚C (67)	200˚C/-50˚C (67)
Ø169x245	105x210x59

Alarm Horn Speakers

The DNH range of Music Horns represents a unique sound performance. The precise sound quality combinded with the high sensitivity make these models superb for music reproduction.

MH-30 has an extended frequency range and the powerful output of the MH-50 (120 dB at 1 m) will provide coverage over very large areas. Music Horns are used in sports stadia, cruise liners, school yards, swimming pools, leisure parks and mountain resorts. Increased IP-protection is also possible.

Alarm horns have a very high SPL value for alarm purposes.

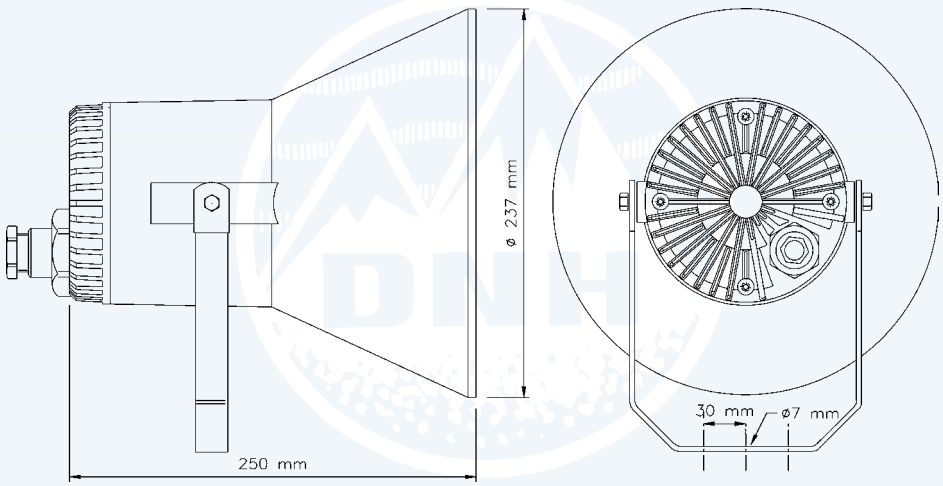

Model	**DH-30/DS-100**	**DH-50/DS-100**	**DH-30/DST-100**	**HPA-60**
Material/Colour	Fiberglass Polyester, Alu. LM 6 / RAL 7035, Stainless Steel Bracket			Alu PA 6/RAL 7035
Rated/max power, Watt	100W	100W	100W	60W
SPL/1W/1m(dB)	110 dB	111 dB	110 dB	110 dB
Effective freq.range, Hz	300-5000 Hz	200-5000 Hz	300-5000 Hz	310-8000 Hz
Max/Min.amb.temp. (IP)	200˚C/-50˚C (67)	200˚C/-50˚C (67)	200˚C/-50˚C (67)	150˚C/-50˚C (67)
Dimensions, mm	Ø325x504	Ø508x664	Ø325x504	Ø237x250

please see: **www.dnh.no**

Music Horn Speakers

MH-15
and
MH-30
and
MH-50

Music horns have had an excellent reputation for many years and have been chosen for many different projects throughout the world. Among them :

- Meribel Stadium, France
- Wimbledon All England Tennis Club
- Royal Caribbean Cruise Liners
- Hurtigruta : “Trollfjord”, Norway
- Carnival Cruise Line
- Narvik slalom and down hill, Norway
- Olympic Games in Athens,Greece

	MH-15	MH-30	MH-50
	PP,ABS RAL 7035	PP,ABS RAL 7035	PP,ABS RAL 7035
	15W/25W	30W/50W	50W/80W
	99 dB	96 dB	104 dB
	140-16000 Hz	85-16000 Hz	140-16000 Hz
	90˚C/-40˚C (55)	90˚C/-40˚C (55)	90˚C/-40˚C (55)
	362x252x310	362x252x310	262x252x310

EEx Speakers

The unique DNH Ex-range satisfies your requirements for flameproof loudspeakers. DNH offers a wide variety of heavy duty EEx-speakers, specially designed for use in military and civil installations where gases and other explosives make special precautions necessary.

There are many different certifications and standards available :
- *ATEX,Zone I and II NEMKO, Norway*
- *Cepel, Brazil*
- *SAA, Australia*
- *FM, USA*
- *CQST, China*
- *IEC-Ex*
- *GOST, Russia*
- *GOST K, Kazakhstan*

The high flexibility of our production system enables DNH to meet the customers requirements for specialities such as special colour, cables,transformers and cable glands.

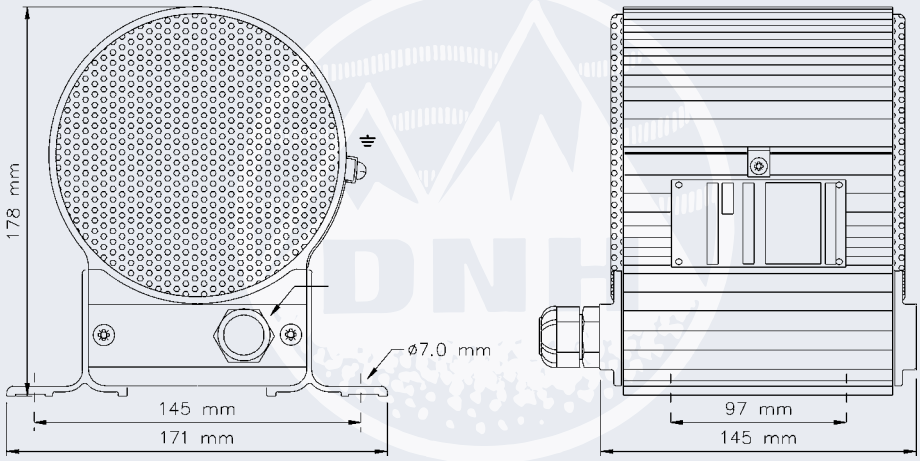

Model	**HS-15 EExmN**	**DST-40 EEx/DHA-30**	**DSP-15 EExeN**	**DSP-15 EExeNsL**	**DHP/DST-40 EExeN**
Material/Colour	Alu/RAL 7031	Alu/RAL 9035/Vestamid	PA/Black	Alu/RAL 9035/Vestamid	Alu/RAL 9035/Vestamid
Rated/max power, Watt	15W	40W/40W	15W/25W	15W/25W	40W
SPL/1W/1m(dB)	105 dB	111 dB	105 dB	109 dB	110 dB
Effective freq.range, Hz	410-7000 Hz	300-5000 Hz	380-7000 Hz	330-8000 Hz	310-6000 Hz
Max/Min.amb.temp. (IP)	60˚C/-50˚C (67)	50˚C/-50˚C (67)	50˚C/-50˚C (67)	55˚C/-55˚C (67)	55˚C/-53˚C (67)
Dimensions, mm	Ø163x247	Ø325x515	186x207x144	349x275x200	212x365x175

please see: **www.dnh.no**

“Design and performance”

EEx References:

- Statfjord
- Oseberg
- Åsgard B
- Visund
- Britannia
- Snorre B
- Valhall
- Kvitebjørn
- Grane
- Balder
- Ringhorne
- Huldra
- Ekofisk
- Piper Bravo
- Njord
- Brent
- Beryl

Others:

- Hibernia, Canada
- N’Kossa, Congo
- Kazakhstan
- Shell platforms, Malaysia
- Petrobras platforms, Brazil
- AKPO, Nigeria

DSP-25 EExmN	CM-6 EExmN	HP-20EExIIN	HS-15 EExIIN	CAREEX-6 CAPEEX-6	CAREEX-36 BAREEX-36	BA-56 EExeN
PA/Black	PA/Black	PA/Black	Alu/RAL 7031	Alu/Anod.	Alu/Anod.	Alu/RAL 9010 grille
25W	6W	20W	15W	6W	6W	6W
106 dB	85 dB	110 dB	107 dB	90 dB	88 dB	90 dB
370-7000 Hz	300-20000 Hz	310-8000 Hz	370-7000 Hz	160-20000 Hz	180-20000 Hz	160-20000 Hz
55˚C/-53˚C (67)	40˚C/-20˚C (67)	60˚C/-20˚C (67)	50˚C/-50˚C (67)	40˚C/-20˚C	40˚C/-20˚C	40˚C/-20˚C
Ø250x340	137x53	Ø237x286	Ø163x247	Ø171x140x145	146x135x88	Ø200x172

Music Masters

The DNH MD-series and professional range of models are designed for applications where a combination of high quality music reproduction and clear public address are required.

These models have an exceptional frequency range and an impressive ability to transmit a distinct and very natural sound, combined with high power output.

The selection of models provides different solutions for different applications and are suitable for use in environments such as shopping malls, restaurants, bars, hotels, churches, conference rooms etc.

Different models are available for insertion, pendant, flush mounting, bracket and tripod.

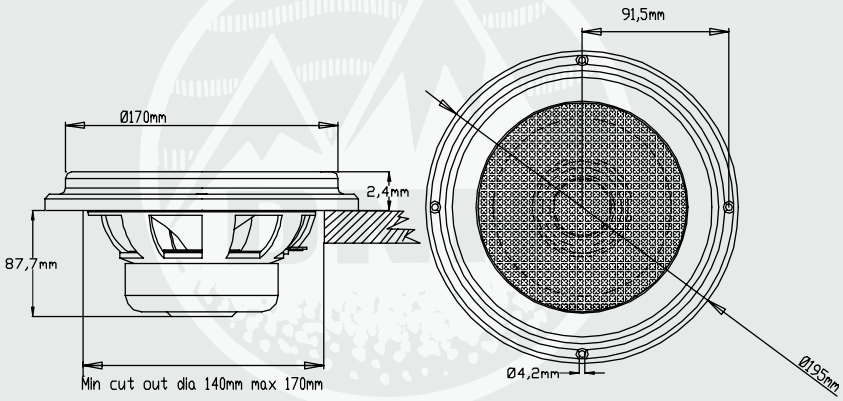

Model	**MD-40**	**MD-60**	**MD-120**	**MD-200**	**MD-300**
Material/Colour	ABS/Black/White	ABS/Black/White	PE,Black	PE/Black	PE/Black
Rated/max power, Watt	40/60W	60/100W	120/150W	200W/300W	300/300W
SPL/1W/1m(dB)	85 dB	90 dB	93 dB	100 dB	98 dB
Effective freq.range, Hz	55-20000 Hz	45-20000 Hz	37-20000 Hz	65-20000 Hz	35-20000 Hz
Max/Min.amb.temp. (IP)	90˚C/-40˚C (44)	90˚C/-40˚C (44)	90˚C/-40˚C (44)	90˚C/-40˚C (54)	90˚C/-40˚C (44)
Dimensions, mm	160x250x180	203x335x250	315x480x335	430x485x320	400x600x430

please see: **www.dnh.no**

“The Height of Performance”

Music Masters, references:

- Lisbon Z00, Portugal
- Football stadium, Leverkusen, Germany
- Swimming pools, Paris
- Airport Hahn, Germany
- Trud stadium, Russia
- Football stadium, Troyes, France
- Lorient Museum, France

	BMD-60	BALL-60	Prob-635
	ABS/Black/White	PE/Black/White	Solid Brass/Stainless Steel
	60W/100W	60W/100W	30W /60W
	90 dB	90 dB	92 dB
	45-20000 Hz	45-20000 Hz	55-20000 Hz
	90˚C/-40˚C(44)	90˚C/-40˚C(44)	90˚C/-40˚C
	Ø295x220	Ø300x300	Ø195x92

DNH reserves the right to alter specifications wihout notice

Cabinet Loudspeakers

DNH offers a wide range of cabinet loudspeakers for different applications. Common for all models are easy installation, colour options, and a nice design that always will be a comfort to the eye. Ideal for public address and background music systems.

Several models are suitable for both indoor and outdoor use.

Our cabinet models are designed for use in public places, airports, churches, conference rooms, sports arenas as well as industrial environments.

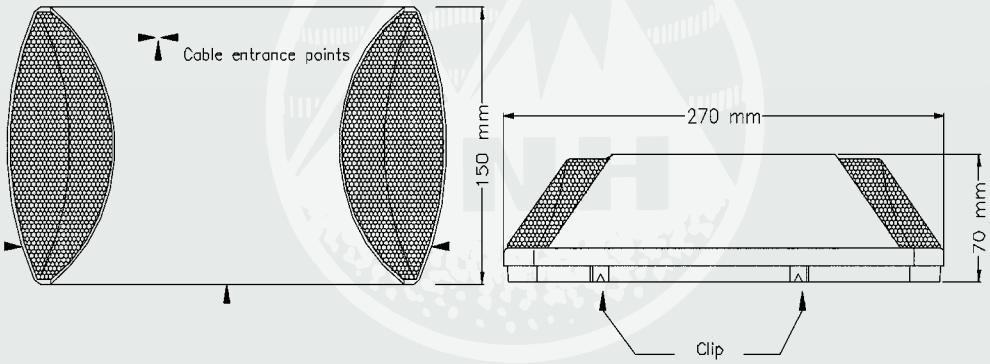

Model	**B-406**	**BLC-550**	**CW-4**	**CAU-4**	**Safe-m6**	**Safe-10P**
Material/Colour	ABS/RAL-9002	ABS/RAL-9010	Particle board/nut	Alu/RAL-7035	Alu/white/red	ABS/RAL-9010
Rated/max power, Watt	6W/8W	6W/10W	4W/8W	4W/8W	6W/10W	10W/15W
SPL/1W/1m(dB)	90 dB	90 dB	90 dB	90 dB	87 dB	85 dB
Effective freq.range, Hz	180-14000 Hz	150-15000 Hz	140-20000 Hz	160-16000 Hz	220-20000 Hz	160-20000 Hz
Max/Min.amb.temp. (IP)	90˚C/-20˚C	90˚C/-20˚C	90˚C/-40˚C	120˚C/40˚C(55)	150˚C/-40˚C	90˚C/-40˚C(44)
Dimensions, mm	210x210x66	Ø206x85	250x170x88	128x237x100	105x210x59	104x206x55

please see: **www.dnh.no**

“Loud and clear”

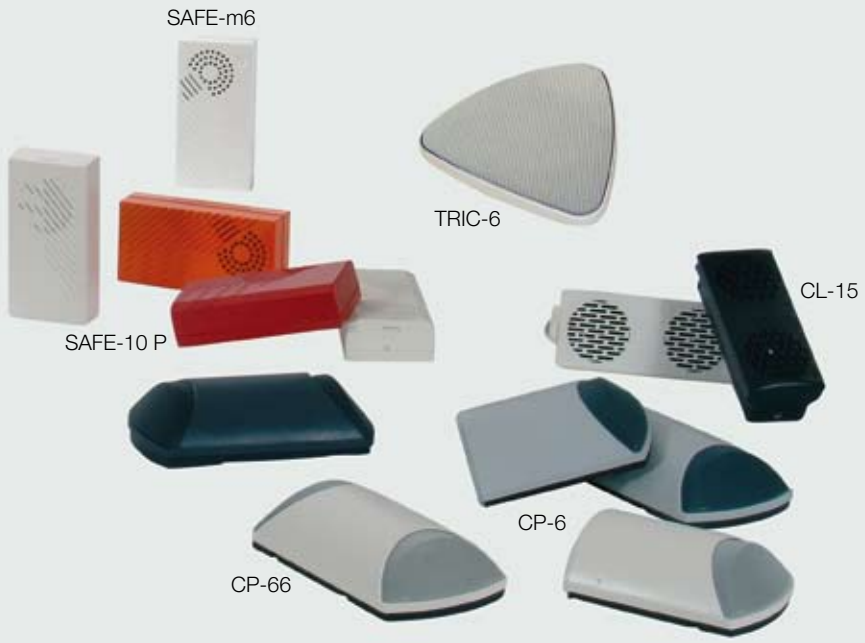

Cabinet Speakers, References :

- Malpensa Airport, Milano,Italia
- National Public Hospital, Oslo, Norway
- Madrid Underground, Spain
- Hamburger Hochbahn, Germany
- Amman Airport, Jordan
- NSB, The Norwegian Railways
- Holy Trinity Church, Sheffield, UK
- Singaporean Coastguard, Singapore
- London Underground
- Opera Paris, France

CP-6	CP-66	CL-15	CAS-6	CAS-15	CAS-30	TRIC-6
ABS/RAL-9010	ABS/RAL-9010	PP Vo/black/white	Alu/PA/white/anod.	Alu/PA/white/anod.	Alu/PA/white/anod.	ABS/RAL 9010
6W/10W	6W/10W	15W/20W	6W/10W	15W/20W	30W/40W	6W
88 dB	88 dB	94 dB	88 dB	91 dB	92 dB	88 dB
180-20000 Hz	180-20000 Hz	180-20000 Hz	110-20000 Hz	100-20000 Hz	95-20000 Hz	150-16000 Hz
90˚C/-40˚C	90˚C/-40˚C	90˚C/-40˚C(54)	110˚C/-40˚C(54)	110˚C/-40˚C(54)	110˚C/-40˚C(54)	90˚C/-20˚C
150x195x70	150x270x70	95x210x70	100x109x183	100x109x300	100x109x600	220x220x38

DNH reserves the right to alter specifications wihout notice

Projectors

The DNH projector loudspeakers represent a wide range of options.

These models cover multiple applications for indoor as well as outdoor use. In addition to the standard models, we offer different specialities such as weather proof and fire proof versions, and of course colour options. The ideal versions for maximum sound coverage and high performance.

Projectors are excellent for inside and outside installation intended for public address systems and background music, for instance in airports and railways.

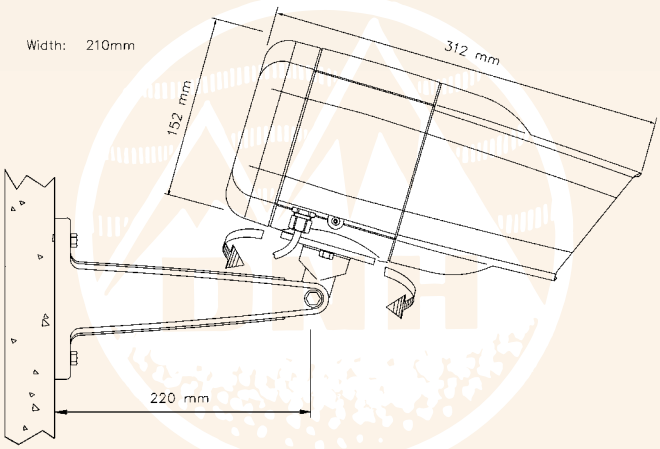

Model	**CAR-4**	**CAR-6**	**CAP-15**	**DP-10**	**DP-30**
Material/Colour	Alu/white or anod.	Alu/White or anod.	Alu/White or anod.	ASA/RAL 7035	ASA/RAL 7035
Rated/max power, Watt	4//6W	6W/10W	15W/20W	10W/15W	30W/50W
SPL/1W/1m (dB)	90 dB	90 dB	92 dB	96 dB	90 dB
Effective freq.range, Hz	150-20000 Hz	150-20000 Hz	150-20000 Hz	150-20000 Hz	110-20000 Hz
Max/Min.amb.temp. (IP)	110˚C/-40˚C	110˚C/-40˚C	110˚C/-40˚C(55)	150˚C/-40˚C(55)	150˚C/-40˚C(55)
Dimensions, mm	Ø146x90	Ø146x175	Ø146x200	210x152x312	210x152x312

please see: **www.dnh.no**

“Design and Performance”

References:

- Metro in Athens, Greece
- Amman Airport, Jordan
- London Underground, England
- Malpensa Airport, Milano, Italy
- Carnival Cruise LIne
- RCCL Cruise Line
- Underground in Madrid, Spain
- Heathrow Airport, London
- Olympic Games, Greece

DPD-10	DPD-30	PS-6	Prosound-300	VEP-6	BIVEP-6	VEP-15
ASA/RAL 7035	ASA/RAL 7035	PA/RAL 7035	PA/RAL 9005 or 7035	ABS/RAL 7035	ABS/RAL 7035	ABS/Vo/White
10W/15W	30W/50W	6W/15W	30W/50W	6W/15W	6W/15W	15W/20W
94 dB	90 dB	88 dB	88 dB	89 dB	89 dB	94 dB
150-20000 Hz	110-20000 Hz	150-18000 Hz	110-20000 Hz	190-20000 Hz	160-20000 Hz	150-20000 Hz
150˚C/-40˚C(55)	150˚C/-40˚C(55)	120˚C/-40˚C(56)	90˚C/-20˚C(54)	90˚C/-40˚C	90˚C/-50˚C	90˚C/-40˚C(55)
210x152x445	210x152x445	Ø157x160	Ø150x178	110x148	166x139	Ø160x270

DNH reserves the right to alter specifications wihout notice

Metal Ceiling Speakers

DNH offers several models of metal ceiling speakers in different design and shape. Mounting ranges from the conventional screw fitted type (B-560, B-620 and BS-660), to easy spring mounting (BK-560).

The models BS-560, BS-660 and BK-560 will have no visible screws.

The prob versions of B-560 and B-620 are fitted with two-way loudspeaker systems for extended frequency range and high power.

The metal ceiling speakers are available with dust-boxes in V0 and steel fire-domes.

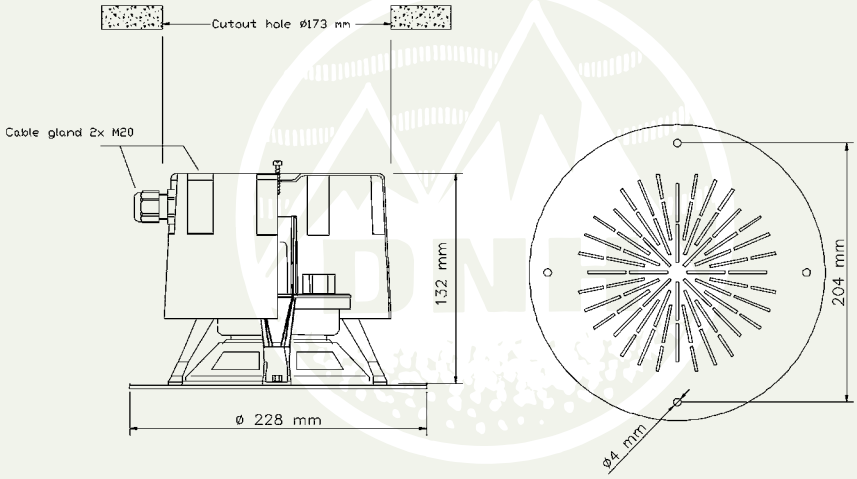

Model	**BK-560**	**B-560**	**BS-560**	**B-620**	**BS-660**
Material/Colour	PA V0/Alu/RAL 9010	PA V0/Alu/RAL 9010	Alu/RAL 9010	PA V0/Alu/RAL 9010	Alu/RAL 9010
Rated/max power, Watt	6W/10W	6W/10W	6W/15W	6W/15W	6W/15W
SPL/1W/1m(dB)	90 dB	90 dB	90 dB	92 dB	90 dB
Effective freq.range, Hz	130-15000 Hz	130-15000 Hz	130-15000 Hz	90-20000 Hz	90-20000 Hz
Max/Min.amb.temp. (IP)	110˚C/-40˚C	110˚C/-40˚C	90˚C/-40˚C	110˚C/-40˚C	110˚C/-40˚C
Dimensions, mm	Ø165x84	Ø165x90	Ø167x95	Ø228x65	Ø242x89

“High Performance”

Ceiling speakers, references :

- Malpensa Airport, Italy
- Carnival Cruise Line
- Holland American Line
- McDonalds Restaurants
- Marks & Spencer, Athens, Greece
- London Underground, UK

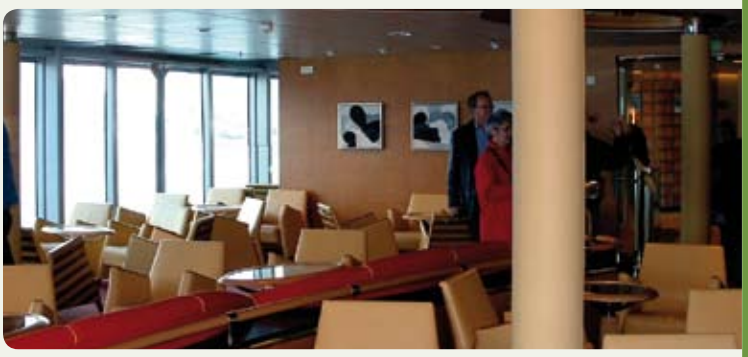

BF-560	BF-620	Prob-560	Prob-620	Prob-635
PA V0/Alu/RAL 9010	PA V0/Alu/RAL 9010	PA V0/Alu/RAL 9010	PA V0/Alu/RAL 9010	Solid Brass or Stainless steel
6W/15W	6W/15W	30W/50W	30W/50W	30W/60W
90 dB	90 dB	88 dB	90 dB	92 dB
150-20000 Hz	150-15000 Hz	60-20000 Hz	60-20000 Hz	55-20000 Hz
90˚C/-20˚C	90˚C/-20˚C	90˚C/-40˚C	90˚C/-40˚C	100˚C/-50˚C
165x115	228x131	Ø165x130	Ø228x137	Ø228x152

DNH reserves the right to alter specifications wihout notice

Plastic Ceiling Speakers

DNH offers an extensive range of ceiling speakers that satisfies the most demanding customer. Superbly engineered for simple and safe installation and the nice design makes DNH the best choice for ceiling speakers.

Our flexible production offers even more options to choose from than our standard models, with regard to colours and other amendments.
The good sound quality is indisputable.
The ingenious mounting systems make the installation easy, and there are no visible screws.

Prob-650 is fitted with a two-way loudspeaker element for extended frequency range and high power. These ceiling speakers should be your first choice with regard to background music systems and P.A. applications.

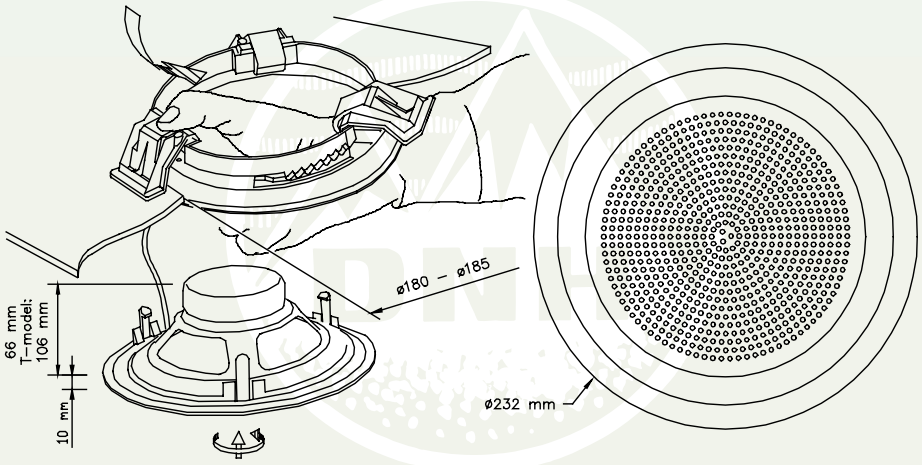

Model	**BL-350**	**BL-550**	**BL-650**	**B-650**
Material/Colour	ABS/RAL 9010	ABS/RAL 9010	ABS/RAL 9010	ABS grille/white
Rated/max power, Watt	6W/8W	6W	6W/15W	6W/15W
SPL/1W/1m(dB)	88 dB	90 dB	90 dB	90 dB
Effective freq.range, Hz	150-20000 Hz	130-15000 Hz	110-15000 Hz	140-18000 Hz
Max/Min.amb.temp. (IP)	80˚C/-20˚C	90˚C/-20˚C	90˚C/-20˚C	90˚C/-20˚C(42)
Dimensions, mm	Ø116x82	Ø150x102	Ø232x102	Ø232x129

please see: **www.dnh.no**

“Design and Performance”

BMD-60

B-650

BL-650

BL-550

References:

- Malpensa Airport, Italy
- Carnival Cruise Line
- RCCL Cruise Line
- Holland American Line
- McDonalds Restaurants
- Marks & Spencer, Athens, Greece
- London Underground, UK
- Hotel Pedro, Portugal

Prob-650	BMD-60
ABS/RAL 9010	ABS/RAL 9010
30W/50W	60W/100W
90 dB	90 dB
60-20000 Hz	45-20000 Hz
90˚C/-20˚C	90˚C/-40˚C (44)
Ø232x117	Ø290x210

Voice Alarm

Voice alarm
In public buildings and common areas as airports and railways there should be installed a voice and evacuation system.
Of course it is imperative that any system designed to provide the public with information about evacuation and danger, must continue to operate throughout the duration of the incident or until such time as everybody has been removed from the area of danger.

VES 561 / VES 360
With the VES-range our engineers have come up with ceiling speakers uniquely designed for many applications.
Easy installation combined with passivated steel fire dome meets both economic demands and international regulations.

The DNH range of clean room loudspeakers (CR) is developed specially to meet the demand for cleanliness in certain environments such as production facilities for micro-electronics, pharmaceutical industry, photo industry and laboratories.

Our Aqua-30 underwater loudspeaker is 100% water proof and has excellent performance in or out of water. Unique design and supplied with 5 m cable.

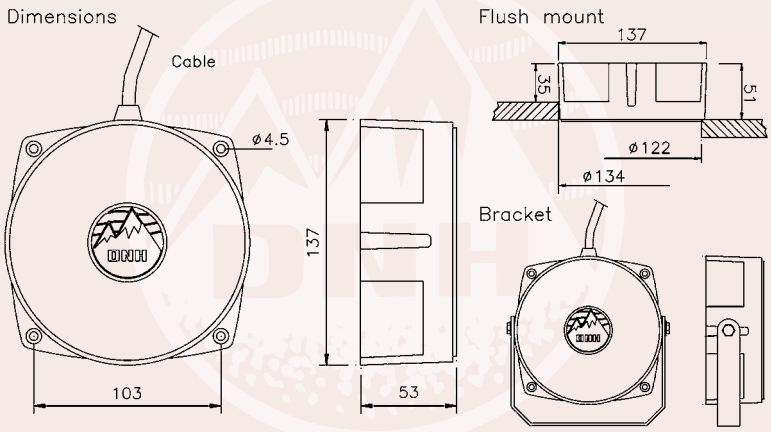

Model	**VES-561**	**SAFE-561**	**VEP-6**	**BIVEP-6**	**BIVEH-6**	**VEP-15**
Material/Colour	Steel,Alu/RAL 9010	Steel/RAL 9010	ABS/RAL 7035	ABS/RAL 7035	ABS/RAL 7035	ABS/Vo/White
Rated/max power, Watt	6W/8W	6W	6W/15W	6W/15W	6W/10W	15W/20W
SPL/1W/1m(dB)	90 dB	90 dB	89 dB	89 dB	103 dB	94 dB
Effective freq.range, Hz	180-13000 Hz	180-13000 Hz	190-20000 Hz	160-20000 Hz	650-5000 Hz	150-20000 Hz
Max/Min.amb.temp. (IP)	120˚C/-20˚C	90˚C/-20˚C	90˚C/-40˚C	90˚C/-50˚C	90˚C/-40˚C	90˚C/-40˚C(55)
Dimensions, mm	Ø167x90	Ø169x65	110x148	166x139	210x139	Ø160x270

please see: **www.dnh.no**

Clean Room Specialities

Applications:

- Clean room applications (CR)
- Swimming pools

Voice Alarm (BS-5839 Part 8)

- in public places, cruise liners, airports, railways.
- Any kind of special sound niches.

BL-550 CR	BLC-550 CR	CR-6	Aqua-30	UP-56	CL-15
ABS/RAL 9010	ABS/RAL 9010	ABS/RAL 9010	ABS/NCS 1070-B	Alu/RAL 9010	PP Vo/Black/White
6W/15W	6W/15W	6W/30W	20W/30W	6W	15W/20W
88 dB	88 dB	85 dB	105 dB	90 dB	94 dB
60-12000 Hz	150-12000 Hz	280-18000 Hz	80-20000 Hz	120-11000 Hz	180-20000 Hz
90˚C/-20˚C	90˚C/-20˚C	90˚C/-20˚C	90˚C/-20˚C(68)	90˚C/-20˚C	90˚C/-40˚C(54)
Ø160x102	Ø206x85	Ø137x53	137x53	178x178x70	95x210x70

DNH reserves the right to alter specifications wihout notice

NS-EN ISO 9001 Certified

Nemko Certification

NORWEGIAN ACCREDITATION No S001

CERTIFIED IQNet MANAGEMENT SYSTEM

"The original DNH design"

The Buyer of DNH loudspeakers benefits from the research and engineering which DNH has performed for more than 60 years in developing high class loudspeakers for every purpose and demand. This experience, combined with the most careful selection of materials and the strictest manufacturing controls, will assure you performance of highest quality.

During all stages of our manufacturing and production process, a fully documented and Approved Quality Assurance system to ISO 9001 is imposed.

Head Office:
DNH AS
NO-3770 KRAGERØ
NORWAY
TEL.: +47 35 98 56 00
FAX: +47 35 98 56 10

E-mail: dnh@dnh.no
www.dnh.no

Germany:
DNH GmbH
NEUMANN REICHARDT-STRASSE 27-33,
D-22041 HAMBURG
TEL.: +49 (0) 40 - 65 69 30-0
FAX: +49 (0) 40 - 65 69 30 30

E-mail: dnh@dnh.de
www.dnh.de

England:
DNH WW. Ltd.
31 CLARKE RD,
MOUNT FARM, BLETCHLEY
MILTON KEYNES, MK1 1LG, ENGLAND
TEL.: +44 1908 275 000
FAX: +44 1908 275 100
E-mail: dnh@dnh.co.uk
www.dnh.co.uk

France:
DNH
PARIS
TEL.: +33 1 5380 0276
FAX: +33 1 4588 1594
MOBILE: +33 6 8761 4284

E-mail: etienne@dnh.no
www.dnh.no

USA:
DNH Speakers inc.
900 CALCON HOOK ROAD
BAY 16, SHARON HILL
19079 PA, USA
TEL.: +1 484 494 5790
FAX: +1 484 494 5793
E-mail: dnh@dnhspeakers.com
www.dnhspeakers.com